Product concept

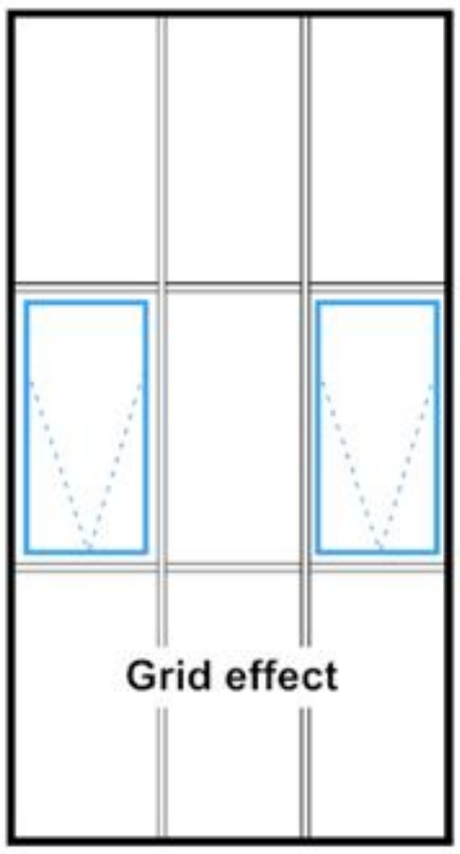

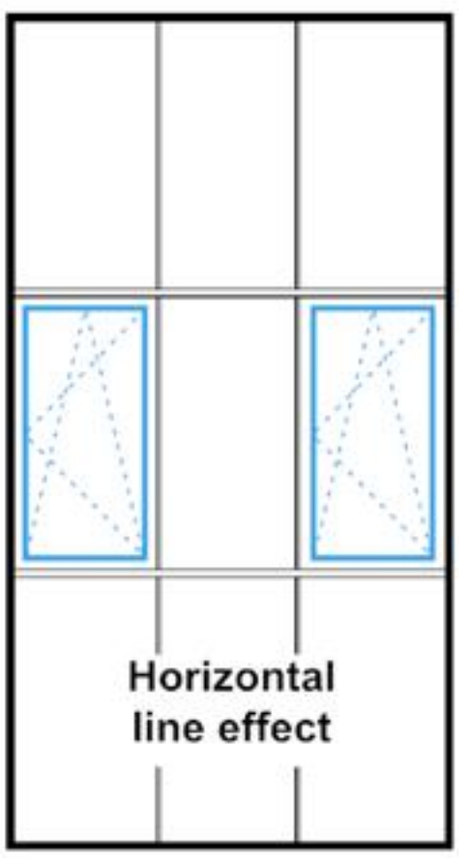

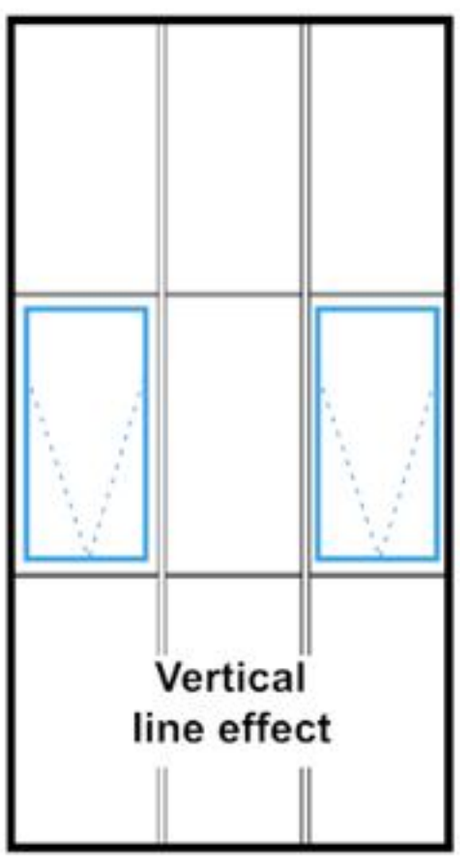

STRUCTURE

- 52mm module mullion-transom grid.
- 20-240mm depth.
- Steel reinforcement (standard).
- Aluminium sleeve sections.
- Square-cut mullion/transom linkage.
- Assembly using connectors fixed on the transom (punch tool machining) for face-on mounting. Specific junction piece for side-on mounting.
- Weathering on mullion/transom assemblies using connector plugs.
- Weathering of external structure ensured by aluminium pressure plates equipped with EPDM gaskets and plugs. Internally, EPDM gaskets are used. Any water ingress drained through pressure plate and horizontal caps.
- 6-32mm infill thicknesses.
- Thermal insulation ensured by a horizontal and vertical PVC spacer gasket installed between the structure and the external pressure plates.
- Clipped external aluminium caps.

EFFECTS

Grid effect

- Caps clipped onto aluminium pressure plates.
- Vertical 52mm x 23mm cap and horizontal 52mm x 15mm cap.
- Convex and concave angles from 0° minimum to 10° maximum.

Horizontal line effect

- Horizontal support identical to Grid effect version with a rounded or ogive-shaped transom cap.
- SSG type* CEKAL certified glass with arissed edges.
- 2-sided calculations according to DTU 39.
- Vertically, a security piece in the centre of the free edge holds infills for maximum deflection requirements exceeding 2mm.
- 22mm-wide face trim gasket between mullions.
- Concave and convex angles from 10° minimum to 20° maximum.

Vertical line effect

- Vertical support identical to Grid version with straight or rounded shaped cap.
- SSG type* CEKAL certified glass with arissed edges.

  2-sided calculations according to DTU 39.
- Horizontally, a pressure plate in the centre of the free edge holds infills for maximum deflection requirements exceeding 2mm.
- 22mm-wide face trim gasket between transoms.
- Weathering by low modulus silicone clear sealant on lower glazing.

CONCEALED VENTS

Bonding

SSG-type glazing is carried out by qualified companies following technical specifications and instructions from Technal and sealant suppliers.

All bonding is carried out onto aluminium profiles (manufactured under CEBTP control) using glazing silicone sealant (conforming to SNJF standards or technical specification).

This procedure is carried out according to a CSTB technical specification.

Glass

Conforms to technical specification, in particular CEKAL standard type SSG. 24mm or 31mm thickness, arissed on all four sides.

Tilt-and-turn

- Hinging hardware concealed in rebate.
- Stainless steel hardware with half-turn handle, rods, locking friction stay and foolproofing device.
- Sloped vent profiles allow opening handle clearance for ease of use.

Open-in

- Hinging hardware concealed in rebate.
- Opening with quarter-turn handle.
- Sloped vent profiles allow opening handle clearance for ease of use.

Bottom hung

- Sash bolt for bottom-hung vent.
- Concealed hinges, 2 friction stays concealed in rebate.
- Weatherproofing between fixed frame and vent frame using EPDM gasket.
- 300mm maximum opening.

Top-hung

- Adjustable stainless steel friction stay hardware.
- Multi-point central locking system.
- Weatherproofing between fixed frame and vent frame using EPDM gasket.

Fire access

- 31mm infill.
- Hinge hardware concealed in rebate.
- Complete locking system with square socket opening.

SSG type : Structural Sealant Glazing type*

**The conception and dimensions of the systems presented in this catalogue are in compliance with the French and / or European regulations applicable at the time of the realization of the document. The aluminium fabricator and/or consultant are entitled to check if these conceptions and dimensions have to be adapted according to local legislation and all other relevant norms and standards.*

TECHNAL®

Product concept

Grid effect

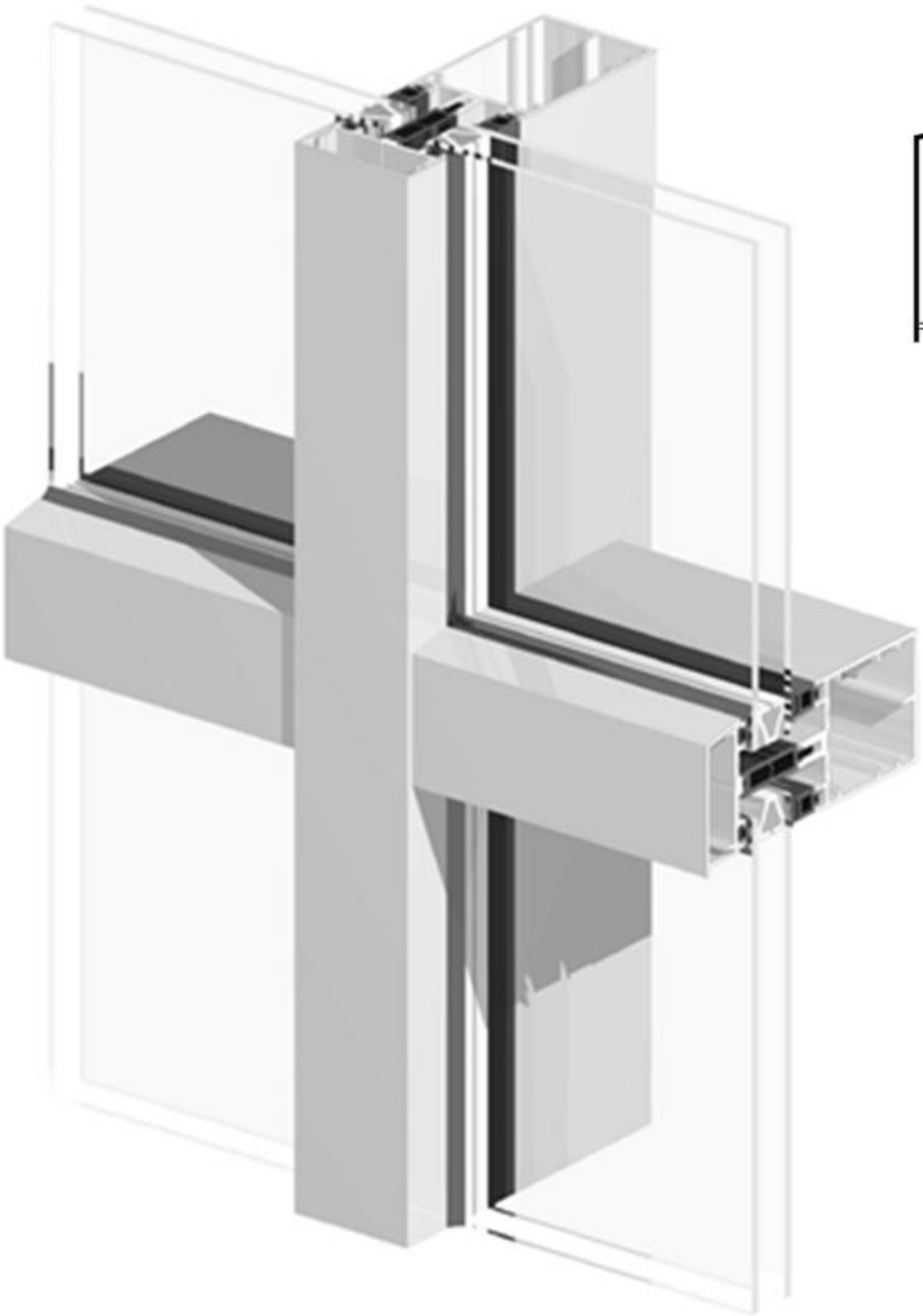

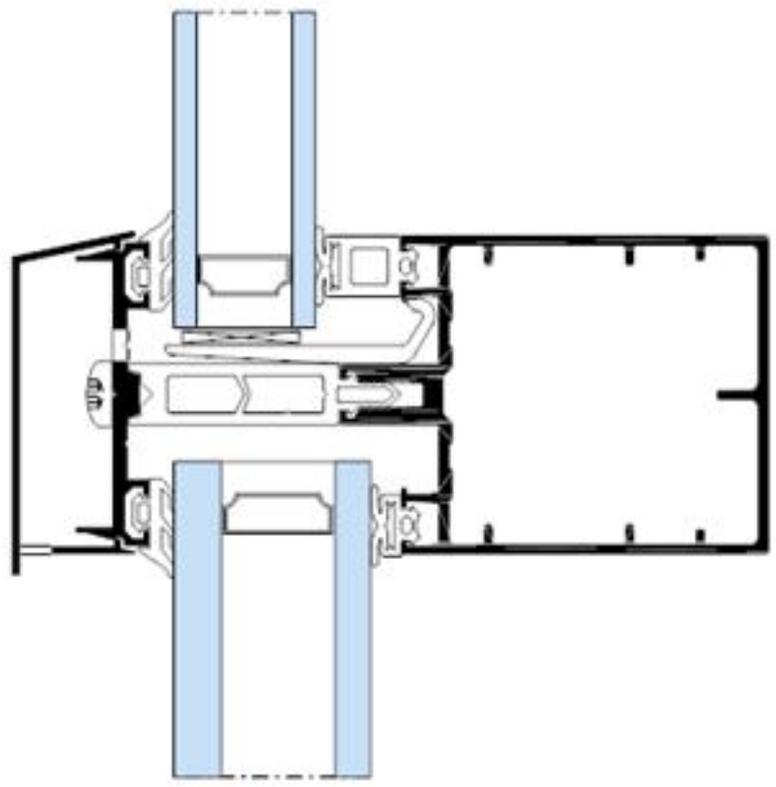

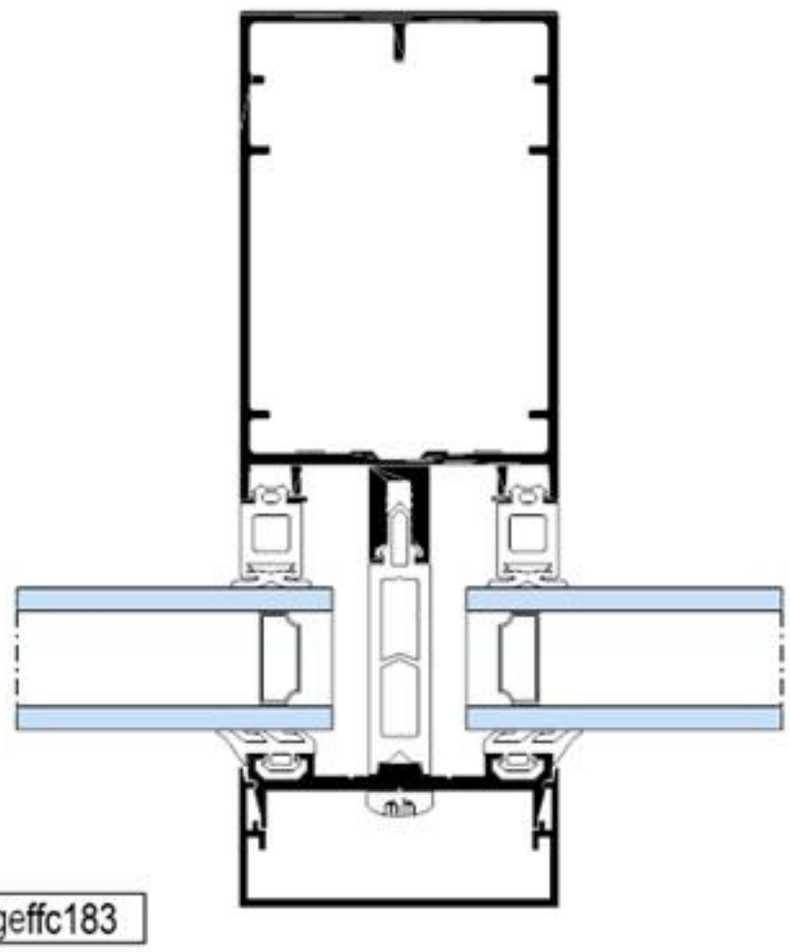

geffc183

Product concept

Horizontal line effect

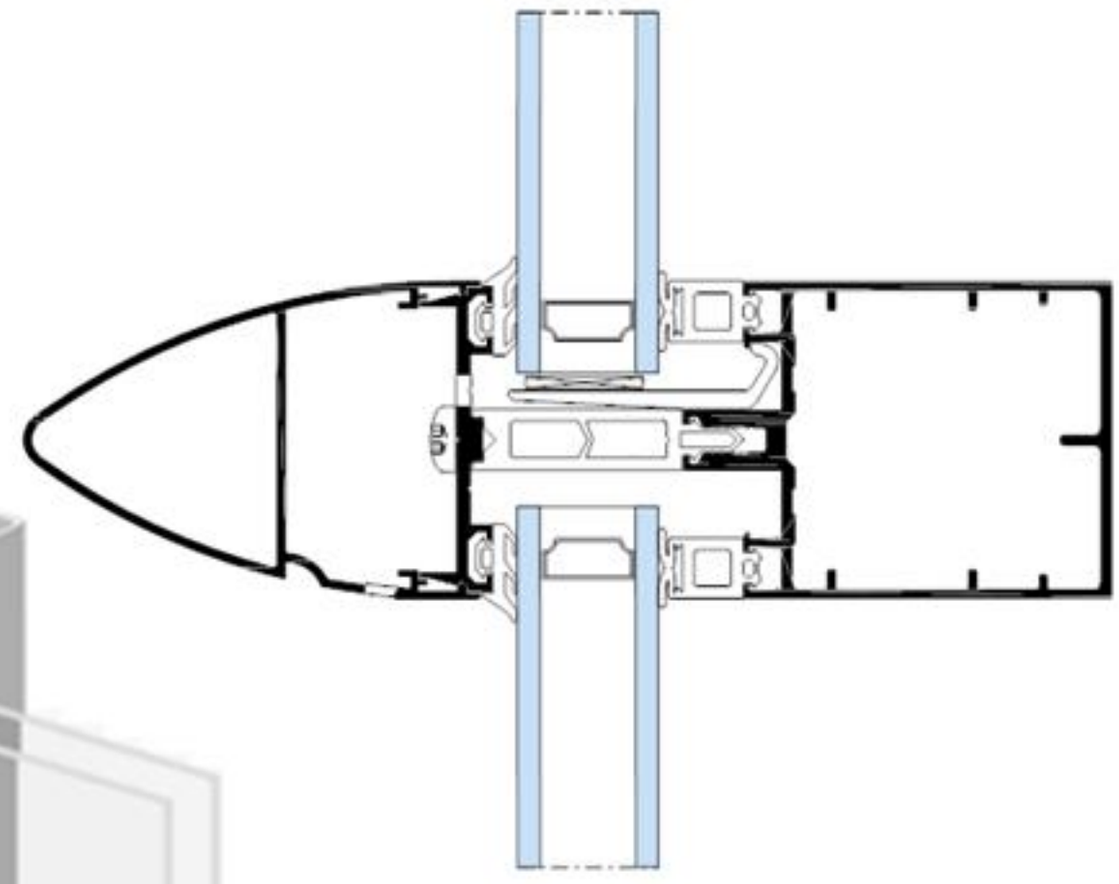

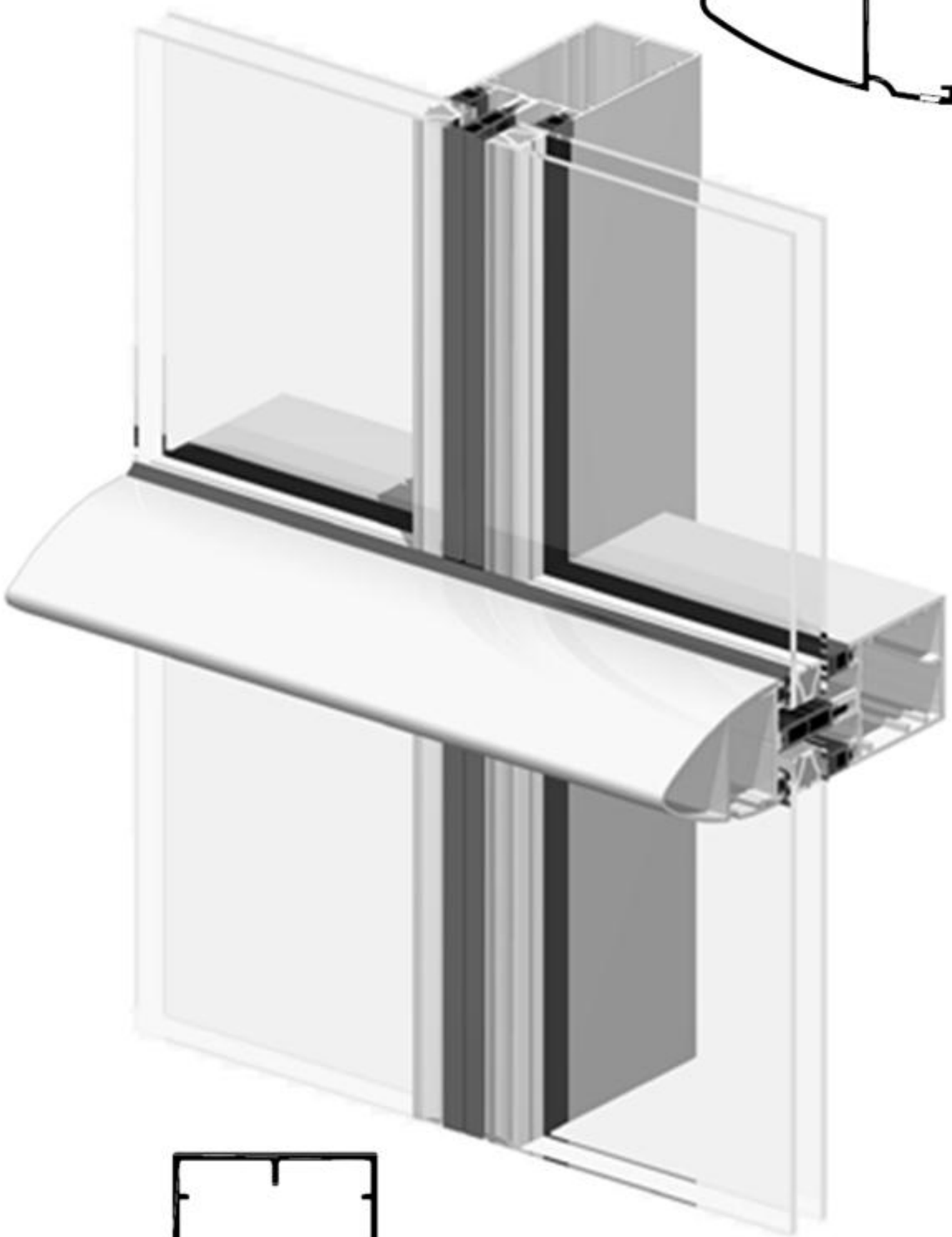

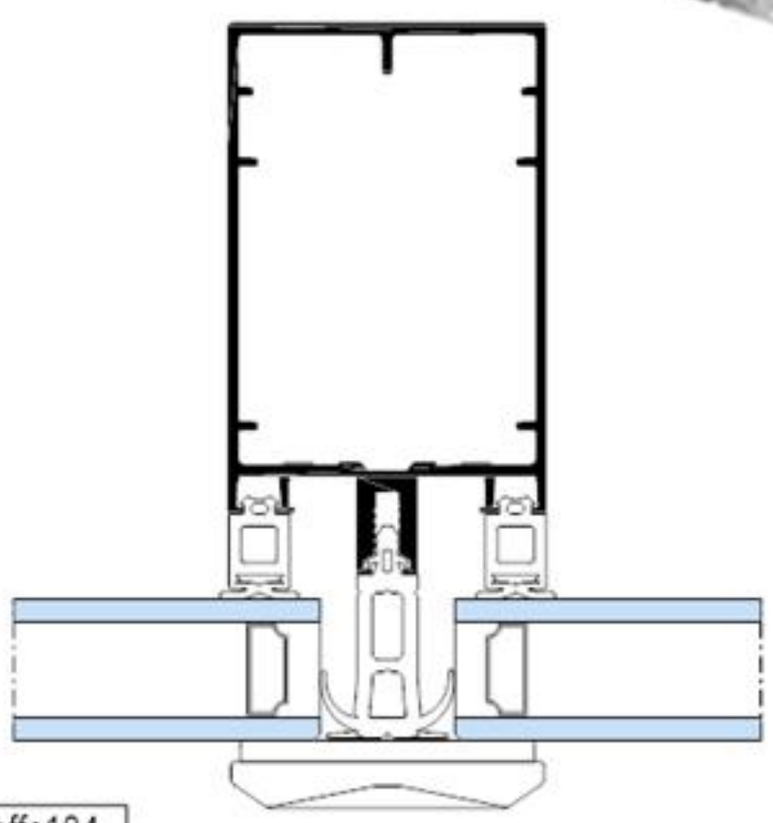

geffc184

TECHNAL®

Product concept

Vertical line effect

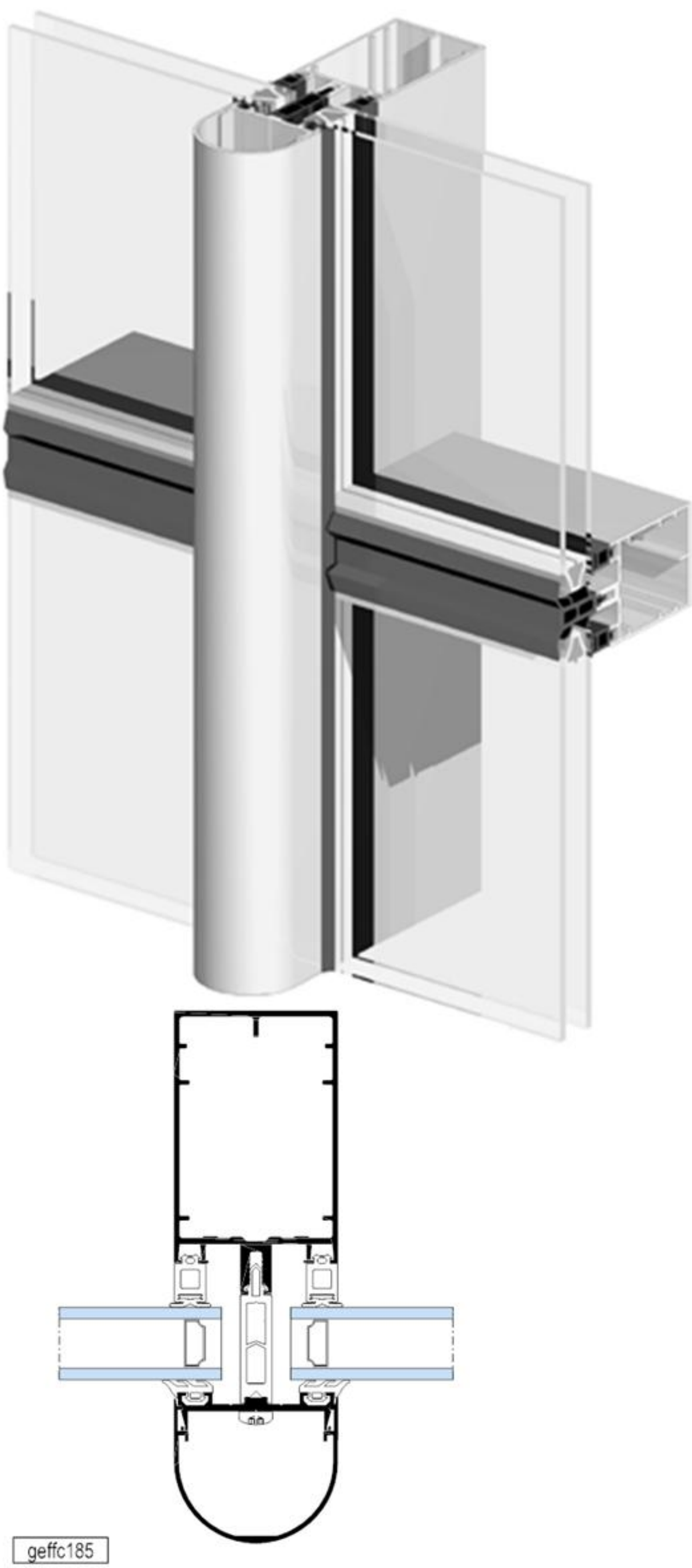

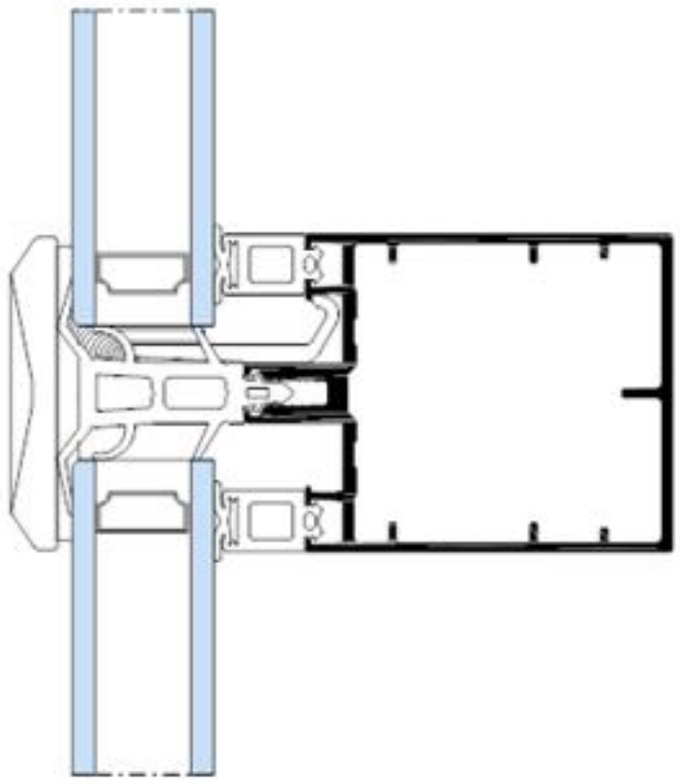

Performance

Acoustic performance

Measurements carried out at Saint Gobain Vitrage laboratory in Aubervilliers
(French standard NF S31-051, ISO 140) adjusted according to standard EN ISO 717-1

According to NAR 2000			Glass only		Grid façade			
Dimensions 1430 x 1425		Type of glass	Component mm	Rw (C;Ctr) dB	Rw (C;Ctr) dB	R_A dB	$R_{A,tr}$ dB	Measurement reference
Pressure plate	Top-hung	Climalit silence	8/6/44.2 (358 AP)	39 (-1 ; -5)	38 (-1 ; -3)	37	35	626108
		Climalit silence	10/12/44.2 (370 AP)	42 (-2 ; -5)	40 (-1 ; -2)	39	38	626109
	Tilt-and-turn	Climalit silence	8/6/44.2 (358 AP)	39 (-1 ; -5)	41 (-1 ; -4)	40	37	626095
		Climalit silence	10/12/44.2 (370 AP)	42 (-2 ; -5)	43 (-1 ; -3)	42	40	626096

Rw + C = R_A in dB : this is an absorbtion coefficient for BACKGROUND noise
R_A, tr in dB : this is an absorbtion coefficient for TRAFFIC noise

NAR : New Acoustic Reglementation

All test reports are available and downloadable in PDF format on our Internet site: www.technal.fr .

geffc007

Thermal performance

■ **Regulations**

New building and extension with planning permission		H1 and H2 zones	H3 zone
Reference value: Transparent glass panes < 50% of the building's vertical walls	**Ucw**	2.4	2.6
Reference value: Transparent glass panes = 75% * of the building's vertical walls	**Ucw**	1.7	1.9
Reference value: Transparent glass panes = 100% * of the building's vertical walls	**Ucw**	1.4	1.5
Maximum permitted value with offsets (walls, floors, roofing)	**Ucw**	2.9	

* Calculate for intermediate percentages.

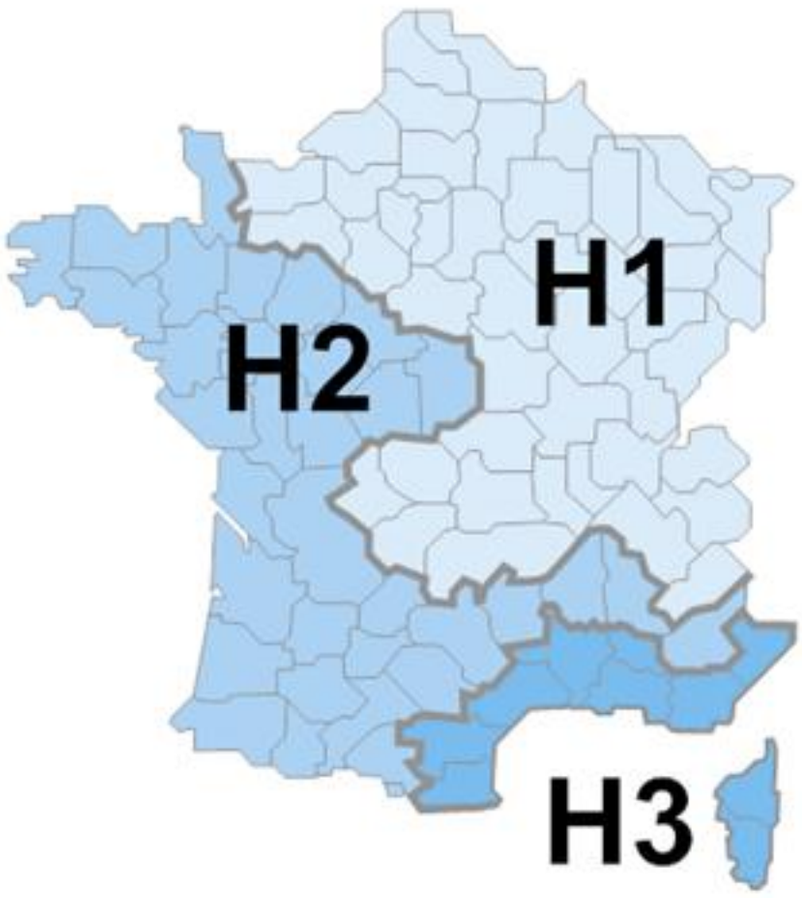

UCW values are validated in France by the CSTB ;

study reference: CTSB DERIBIV 2002-283

CSTB

TECHNAL®

TECHNAL®

Performance

Thermal performance

Glass values

Glass	U-values according to glazing components Vertical glazing Certified emissivity according to ThU 2000 (EN673)					
Note: no certified emissivity < 0.05 at end 2001	Emissivity	AIR or ARGON airspace (mm)	Glazing Ug- value with AIR airspace Glass thicknesses 4+4	 4+10	Glazing Ug- value with 85% ARGON + 15% AIR airspace 4+4	 4+10
standard clair	**0.89**	6	3.3			
		8	3.1			
		10	2.9			
		12	2.8			
		14			2.8	
		16	2.7			
Sunergy (Glaverbel)	**0.28**	6	2.8	2.8	2.5	2.5
		8	2.5	2.5	2.2	2.2
		10	2.3	2.3	2.1	2.1
		12	2.2	2.2	2.0	1.9
		14	2.1	2.0	1.9	1.8
		16	2.0	2.0	1.8	1.8
		18	2.0	2.0	1.8	1.8
		20	2.0	2.0	1.9	1.8
Eko Plus (SGG) K Glass (Pilkington) Planibel K Glass (Glaverbel)	**0.16**	6	2.7	2.6	2.3	2.3
		8	2.3	2.3	2.0	2.0
		10	2.1	2.1	1.8	1.8
		12	1.9	1.9	1.7	1.7
		14	1.8	1.8	1.6	1.6
		16	1.7	1.7	1.5	1.5
		18	1.7	1.7	1.6	1.5
		20	1.8	1.7	1.6	1.6
Luxguard low e 1.1 Luxguard low e 1.3	**0.10**	6	2.6	2.5	2.2	2.2
		8	2.2	2.2	1.9	1.9
		10	2.0	2.0	1.7	1.7
		12	1.8	1.8	1.5	1.5
		14	1.7	1.6	1.4	1.4
		16	1.6	1.6	1.4	1.4
		18	1.6	1.6	1.4	1.4
		20	1.6	1.6	1.4	1.4
Planitherm (SGG) Planibel Plus (Glaverbel)	**0.09**	6	2.6	2.5	2.2	2.1
		8	2.2	2.2	1.9	1.8
		10	2.0	1.9	1.6	1.6
		12	1.8	1.8	1.5	1.5
		14	1.6	1.6	1.4	1.4
		16	1.6	1.5	1.3	1.3
		18	1.6	1.5	1.4	1.3
		20	1.6	1.6	1.4	1.4
Planitherm Futur N (SGG) Planistar (SGG) Planibel Top N Thermo Plus Energy (Glaverbel) Optitherm (Pilkington) i Plus (Interpane)	**0.05**	6	2.5	2.5	2.1	2.1
		8	2.1	2.1	1.8	1.7
		10	1.9	1.9	1.5	1.5
		12	1.7	1.7	1.4	1.4
		14	1.5	1.5	1.2	1.2
		16	1.4	1.4	1.2	1.2
		18	1.4	1.4	1.2	1.2
		20	1.5	1.4	1.2	1.2

List given for example purposes, other glass available

Glazing solar factors	g Glass thicknesses 4+4	 6+6
Climalit clair	0.76	0.72
Antelio clair		0.59
Cool Lite SS108		0.12
Planibel clair	0.78	0.75
Planibel vert	0.54	0.46
Thermobel Stopsol gris		0.32
Sunergy clair	0.54	0.52
Sunergy vert		0.33
Sunergy azur		0.36
Eko Plus	0.69	0.65
K Glass	0.72	0.69
Planibel K Glass	0.74	0.71
Luxguard low e 1.1	0.65	
Luxguard low e 1.3	0.65	
Planitherm	0.64	0.61
Planibel Plus	0.67	0.65
Planitherm Futur N	0.62	0.60
Planistar	0.42	0.41
Planibel Top N	0.64	0.62
Thermo Plus Energy	0.39	0.39
Optitherm	0.63	
iPlus	0.58	0.57

List given for example purposes, other glass available

Shutter values

ΔR-values by shutter type according to ThU 2000 (EN 13125)	ΔR $m^2.K/W$
- Accordion-type jalousie, adujstable-louver shutter including all-metal external venetian blinds, swing shutters or fixed-louvred shutters	0.08
- Shutter without louvres in deployed position, aluminium roller shutters	0.14
- PVC roller shutter (e < or = 12 mm) - Sliding louvred shutter or PVC swing shutter, wood swing shutter (e < 22 mm)	0.19
- PVC sliding louvred shutter and wood swing shutter (e > 22 mm) - PVC roller shutter (e > 12 mm)	0.25
- TECHNAL ref V303 Roller louver blind PVC 40 mm - TECHNAL ref V302 Roller louver blind PVC 60 mm	0.22 0.26

S_W Solar factor and thermal transmission U_{cw}-values

Geode light façade with pressure plate : grid and horizontal line effect

grid effect

Mullion FM155 + cap 6617 + pressure plate FM221 + transom FM155 + cap 6667
for tilt-and-turn vent: mullion FM262 + FM267 + vent FM230
for top-hung vent: mullion FM155 + FM 233 + vent FM231 + FM220

horizontal line effect

Mullion FM155 + gasket JM017 + transom FM155 + caps FM237 + pressure plate FM221
for tilt-and-turn vent: mullion FM262 + FM267 + vent FM230
for top-hung vent: mullion FM155 + FM 233 + vent FM231 + FM220

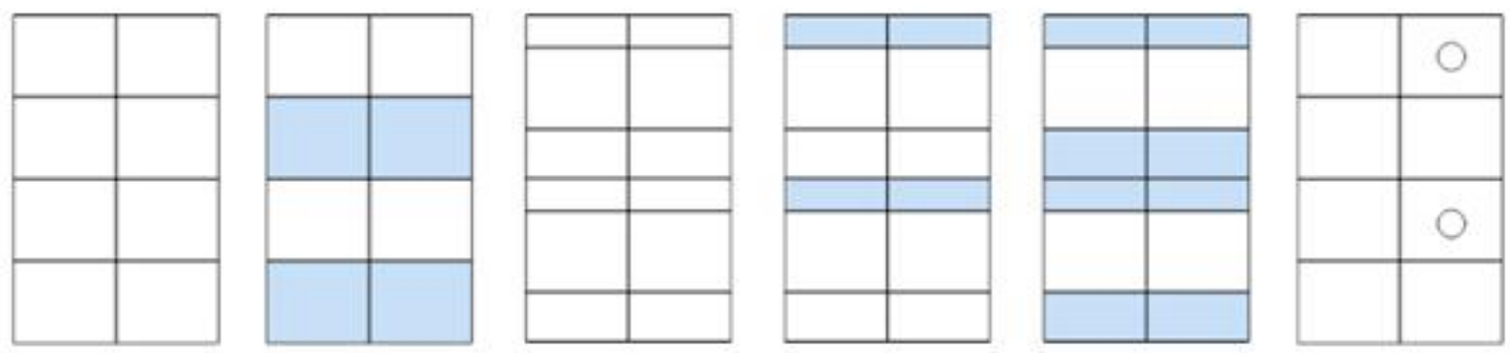

S_g glazing solar factor (including any solar protection)	S_W Solar factors - **winter** for all joinery finishing	S_W Solar factors - **summer** for all joinery finishing
0.1	0.10	0.11
0.2	0.19	0.20
0.3	0.29	0.29
0.4	0.38	0.38
0.5	0.47	0.48
0.6	0.56	0.57
0.7	0.66	0.66
0.8	0.75	0.75

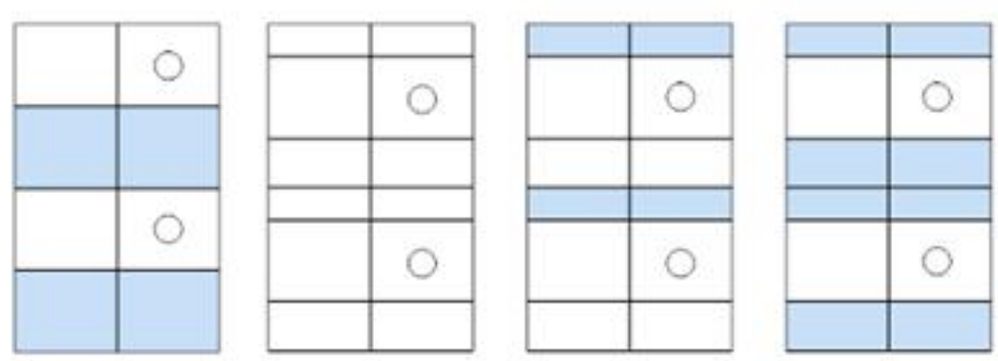

○ = vent

S_g glazing	S_W winter	S_W summer
0.1	0.10	0.12
0.2	0.19	0.21
0.3	0.28	0.29
0.4	0.37	0.38
0.5	0.45	0.47
0.6	0.54	0.55
0.7	0.63	0.64
0.8	0.72	0.73

geffc 008

TECHNAL®

Performance

Thermal performance

GEODE Grid effect with pressure plate	U_{cw} coefficient of bare façade (W/m2.K)		
	bottom frame 100% glazed		Mullion with fixed frames (Scale 1:2) Double glazed unit with aluminium spacer
2 frames per floor Width = 1.35 m x H = (1.50 + 1.50) m	Fixed frames	Fixed frames + vents	
U-value of glass unit centre pane (W/m².K)			
1.1 *	1.5	1.7	
1.2	1.6	1.8	
1.3	1.7	1.8	
1.4	1.8	1.9	
1.5	1.9	2.0	
1.6	2.0	2.1	
1.7	2.0	2.2	
1.8	2.1	2.3	
1.9	2.2	2.3	
2.0	2.3	2.4	
2.1	2.4	2.5	
2.2	2.5	2.6	
2.3	2.6	2.7	
2.4	2.6	2.8	
2.5	2.7	2.8	
2.6	2.8	2.9	
2.7	2.9		
2.8			
2.9			
3 frames per floor Width = 1.35 m x H Top frame = 0.85 m x H clear frame = 1.50 m x H Bottom frame = 1.00 m	**Top and bottom glazed lights** 100% glazed		**Glazed top frame + 32mm opaque bottom frame panel without timber frame Up = 0.85 -** 75% glazed
	Fixed frames	Fixed frames + vents	Fixed frames / Fixed frames + vents
Ug-value of glass unit centre pane (W/m².K)			
1.1 *	1.6	1.7	1.4 / 1.6
1.2	1.7	1.8	1.5 / 1.6
1.3	1.8	1.9	1.6 / 1.7
1.4	1.8	2.0	1.6 / 1.8
1.5	1.9	2.0	1.7 / 1.8
1.6	2.0	2.1	1.7 / 1.9
1.7	2.1	2.2	1.8 / 1.9
1.8	2.2	2.3	1.9 / 2.0
1.9	2.3	2.4	1.9 / 2.1
2.0	2.3	2.5	2.0 / 2.1
2.1	2.4	2.5	2.1 / 2.2
2.2	2.5	2.6	2.1 / 2.2
2.3	2.6	2.7	2.2 / 2.3
2.4	2.7	2.8	2.3 / 2.4
2.5	2.8	2.9	2.3 / 2.4
2.6	2.9		2.4 / 2.5
2.7	2.9		2.4 / 2.6
2.8			2.5 / 2.6
2.9			2.6 / 2.7

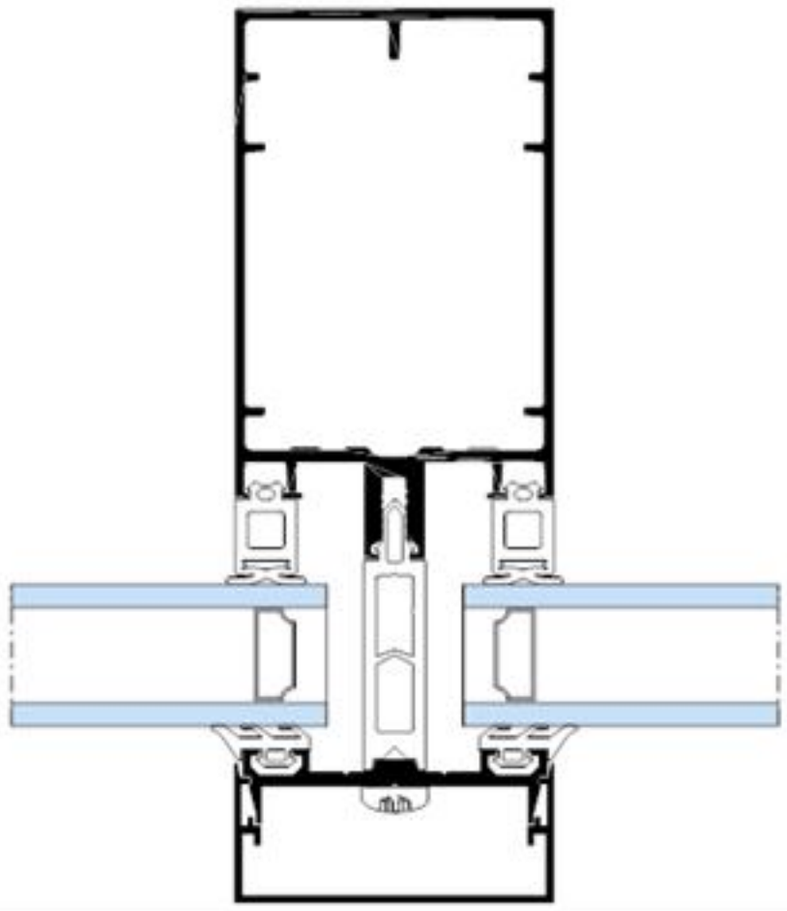

*not validated by CSTB: reading obtained solely with 2 low-emissivity layers

NB the silicone bonding of horizontal line effect glazing and vents does not allow Argon infills

geffc009

GEODE **Grid effect** with pressure plate	**Opaque bottom frame** **2 frames per floor**	**Example Insulating ACERMI-certified extruded polystyrene panels**		**Opaque bottom frame** **3 frames per floor**	**Example Insulating ACERMI-certified extruded polystyrene panels**	
U-value of glass unit centre pane (W/m².K)	Width = 1.35m x H clear frame = 1.50m x H bottom frame = 1.50m	**32mm thickness Up = 1.0** 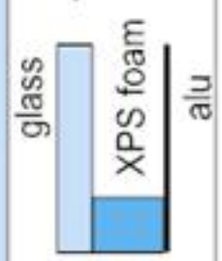	**32mm thickness Up = 0.85** 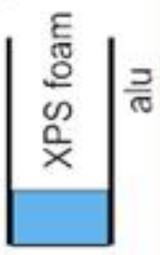	Width = 1.35m x H top frame = 0.85m x H clear frame = 1.50m x H bottom frame = 1.00m	**32mm thickness Up = 1.0** 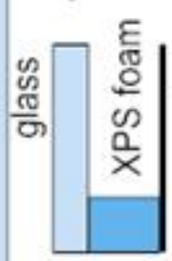	**32mm thickness Up = 0.85** 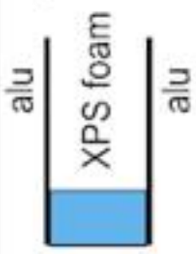
1.1 *	2 frames/floor fixed frames 50% glazed 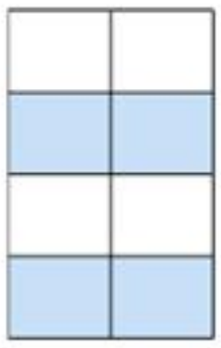	1.4	1.3	3 frames/floor fixed frames 45% glazed 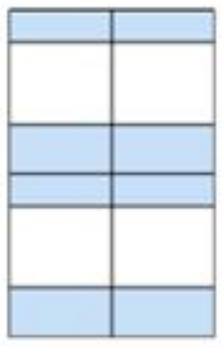	1.4	1.4
1.2		1.5	1.4		1.5	1.4
1.3		1.5	1.4		1.5	1.4
1.4		1.5	1.5		1.6	1.5
1.5		1.6	1.5		1.6	1.5
1.6		1.6	1.6		1.6	1.6
1.7		1.7	1.6		1.7	1.6
1.8		1.7	1.6		1.7	1.6
1.9		1.8	1.7		1.8	1.7
2.0		1.8	1.7		1.8	1.7
2.1		1.8	1.8		1.8	1.8
2.2		1.9	1.8		1.9	1.8
2.3		1.9	1.9		1.9	1.8
2.4		2.0	1.9		2.0	1.9
2.5		2.0	1.9		2.0	1.9
2.6		2.1	2.0		2.0	2.0
2.7		2.1	2.0		2.1	2.0
2.8		2.2	2.1		2.1	2.0
2.9		2.2	2.1		2.1	2.1
1.1 *	2 frames/floor fixed frames and vents 50% glazed 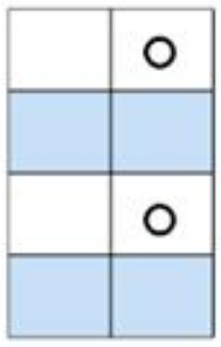	1.6	1.5	3 frames/floor fixed frames and vents 45% glazed 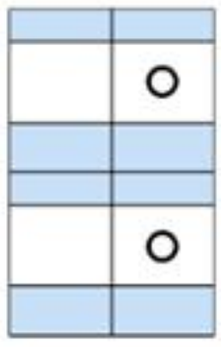	1.6	1.5
1.2		1.6	1.5		1.6	1.6
1.3		1.7	1.6		1.7	1.6
1.4		1.7	1.6		1.7	1.6
1.5		1.7	1.7		1.7	1.7
1.6		1.8	1.7		1.8	1.7
1.7		1.8	1.8		1.8	1.7
1.8		1.9	1.8		1.8	1.8
1.9		1.9	1.8		1.9	1.8
2.0		1.9	1.9		1.9	1.9
2.1		2.0	1.9		2.0	1.9
2.2		2.0	2.0		2.0	1.9
2.3		2.1	2.0		2.0	2.0
2.4		2.1	2.0		2.1	2.0
2.5		2.1	2.1		2.1	2.0
2.6		2.2	2.1		2.1	2.1
2.7		2.2	2.2		2.2	2.1
2.8		2.3	2.2		2.2	2.1
2.9		2.3	2.2		2.3	2.2

*not validated by CSTB: reading obtained solely with 2 low-emissivity layers

NB the silicone bonding of horizontal line effect glazing and vents does not allow Argon infills

geffc010

TECHNAL®

Performance

Thermal performance

GEODE **Horizontal line effect** with pressure plate	**U_{cw} coefficient of bare façade** (W/m2.K)		
	bottom frame 100% glazed		Mullion with fixed frames (Scale 1:3) Double glazed unit with aluminium spacer
2 frames per floor Width = 1.35 m x H = (1.50 + 1.50) m	Fixed frames	Fixed frames + vents	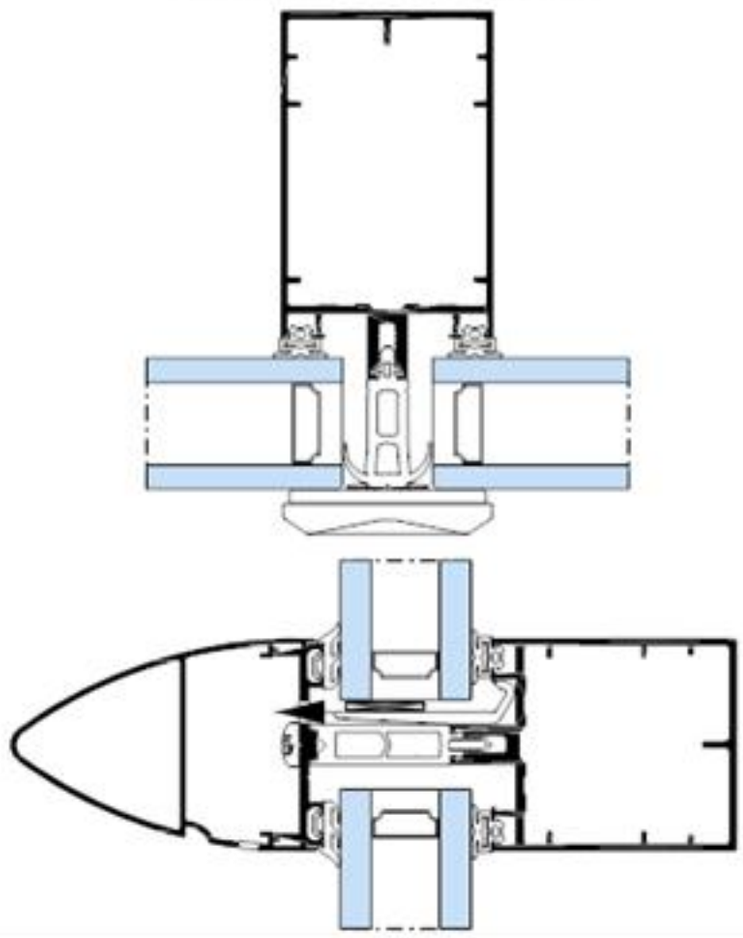
U-value of glass unit centre pane (W/m².K)			
1.3 *	1.7	1.8	
1.4	1.8	1.9	
1.5	1.9	2.0	
1.6	2.0	2.1	
1.7	2.1	2.1	
1.8	2.1	2.2	
1.9	2.2	2.3	
2.0	2.3	2.4	
2.1	2.4	2.5	
2.2	2.5	2.6	
2.3	2.6	2.7	alu / XPS Foam / alu
2.4	2.7	2.7	
2.5	2.8	2.8	
2.6	2.8	2.9	
2.7	2.9		
2.8			
2.9			
3 frames per floor Width = 1.35 m x H Top frame = 0.85 m x H clear frame = 1.50 m x H Bottom frame = 1.00 m	**Top and bottom glazed lights** 100% glazed		**Glazed top frame + 32mm opaque bottom frame panel without timber frame Up = 0.85 -** 75% glazed
	Fixed frames	Fixed frames + vents	Fixed frames / Fixed frames + vents
Ug-value of glass unit centre pane (W/m².K)			
1.3 *	1.8	1.9	1.6 / 1.7
1.4	1.9	1.9	1.6 / 1.7
1.5	1.9	2.0	1.7 / 1.8
1.6	2.0	2.1	1.8 / 1.9
1.7	2.1	2.2	1.8 / 1.9
1.8	2.2	2.3	1.9 / 2.0
1.9	2.3	2.4	1.9 / 2.0
2.0	2.4	2.4	2.0 / 2.1
2.1	2.5	2.5	2.1 / 2.2
2.2	2.5	2.6	2.1 / 2.2
2.3	2.6	2.7	2.2 / 2.3
2.4	2.7	2.8	2.3 / 2.3
2.5	2.8	2.9	2.3 / 2.4
2.6	2.9	2.9	2.4 / 2.5
2.7			2.5 / 2.5
2.8			2.5 / 2.6
2.9			2.6 / 2.7

*not validated by CSTB: reading obtained solely with 2 low-emissivity layers

NB the silicone bonding of horizontal line effect glazing and vents does not allow Argon infills

geffc011

Horizontal line effect with pressure plate	**Opaque bottom frame 2 frames per floor**	**Example Insulating ACERMI-certified extruded polystyrene panels**		**Opaque bottom frame 3 frames per floor**	**Example Insulating ACERMI-certified extruded polystyrene panels**	
U-value of glass unit centre pane (W/m².K)	Width = 1.35m x H clear frame = 1.50m x H bottom frame = 1.50m	**32mm thickness Up = 1.0** glass / XPS foam / alu	**32mm thickness Up = 0.85** alu / XPS foam / alu	Width = 1.35m x H top frame = 0.85m x H clear frame = 1.50m x H bottom frame = 1.00m	**32mm thickness Up = 1.0** glass / XPS foam / alu	**32mm thickness Up = 0.85** alu / XPS foam / alu
1.3 *	2 frames/floor fixed frames 50% glazed	1.5	1.4	3 frames/floor fixed frames 45% glazed	1.5	1.5
1.4		1.6	1.5		1.6	1.5
1.5		1.6	1.5		1.6	1.5
1.6		1.6	1.6		1.7	1.6
1.7		1.7	1.6		1.7	1.6
1.8		1.7	1.7		1.7	1.6
1.9		1.8	1.7		1.8	1.7
2.0		1.8	1.7		1.8	1.7
2.1		1.9	1.8		1.9	1.8
2.2		1.9	1.8		1.9	1.8
2.3		1.9	1.9		1.9	1.8
2.4		2.0	1.9		2.0	1.9
2.5		2.0	2.0		2.0	1.9
2.6		2.1	2.0		2.0	2.0
2.7		2.1	2.0		2.1	2.0
2.8		2.2	2.1		2.1	2.0
2.9		2.2	2.1		2.2	2.1
1.3 *	2 frames/floor fixed frames and vents 50% glazed	1.6	1.6	3 frames/floor fixed frames and vents 45% glazed	1.6	1.6
1.4		1.7	1.6		1.7	1.6
1.5		1.7	1.6		1.7	1.6
1.6		1.7	1.7		1.7	1.7
1.7		1.8	1.7		1.8	1.7
1.8		1.8	1.8		1.8	1.8
1.9		1.9	1.8		1.9	1.8
2.0		1.9	1.8		1.9	1.8
2.1		1.9	1.9		1.9	1.9
2.2		2.0	1.9		2.0	1.9
2.3		2.0	2.0		2.0	1.9
2.4		2.1	2.0		2.0	2.0
2.5		2.1	2.0		2.1	2.0
2.6		2.2	2.1		2.1	2.0
2.7		2.2	2.1		2.2	2.1
2.8		2.2	2.2		2.2	2.1
2.9		2.3	2.2		2.2	2.2

*not validated by CSTB: reading obtained solely with 2 low-emissivity layers

NB the silicone bonding of horizontal line effect glazing and vents does not allow Argon infills

geffc012

TECHNAL®

Performance

Weathering and durability performance

Grid effect façade with top-hung vent

Type of test	Results	Test report reference n
Air permeability, Watertightness, Wind load	Less than 4m3/h/m2 at 1200 Pa pressurisation Less than 4m3/H/m2 at 900 Pa depressurisation Watertight at 1200 Pa pressure No damage at sudden pressure of 2300 Pa No damage at sudden depressurisation of 1700 Pa Top-hung frame A3-EE-VE 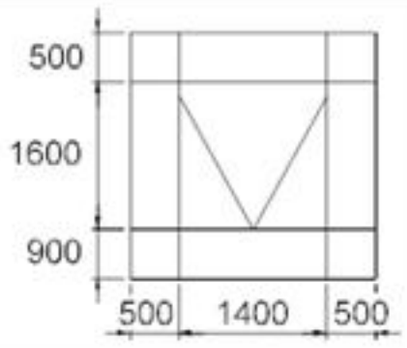	0111/01

Grid effect façade with tilt-and-turn vent

Type of test	Results	Test report reference n
Air permeability, Watertightness, Wind load	Less than 4m3/h/m2 at 1200 Pa pressurisation Less than 4m3/H/m2 at 900 Pa depressurisation Watertight at 1200 Pa pressure No damage at sudden pressure of 2300 Pa No damage at sudden depressurisation of 1700 Pa Tilt-and-turn frame A3-EE-VE 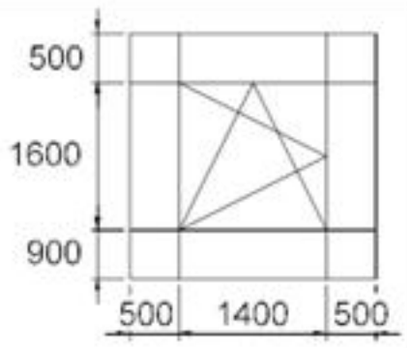	0110/01

Grid effect façade with convex and concave angles

Type of test	Results	Test report reference n
Air permeability, Watertightness, Wind load	Less than 4m3/h/m2 at 1200 Pa pressurisation Less than 4m3/H/m2 at 900 Pa depressurisation Watertight at 1200 Pa pressure No damage at sudden pressure of 2300 Pa No damage at sudden depressurisation of 1700 Pa 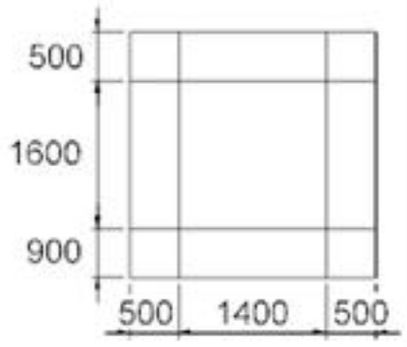	0109/01

Grid effect façade

Type of test	Results	Test report reference n
Shock impact	Satisfactory No damage as a result of a dynamic shock	0106/02

Horizontal line effect façade with top-hung vent

Type of test	Results	Test report reference n
Air permeability, Watertightness, Wind load	Less than 4m3/h/m2 at 1200 Pa pressurisation Less than 4m3/H/m2 at 900 Pa depressurisation Watertight at 1200 Pa pressure No damage at sudden pressure of 2300 Pa No damage at sudden depressurisation of 1700 Pa Top-hung frame A3-EE-VE 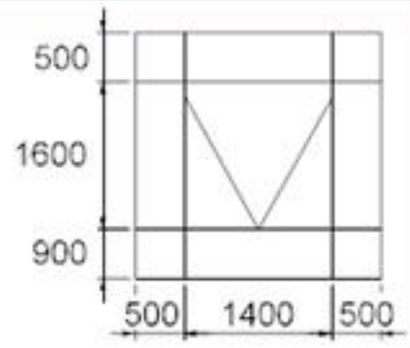	0107/02

geffc015

Horizontal line effect façade with tilt-and-turn vent

Type of test	Results	Test report reference n
Air permeability, Watertightness, Wind load	Less than 4m3/h/m2 at 1200 Pa pressurisation Less than 4m3/H/m2 at 900 Pa depressurisation Watertight at 1200 Pa pressure No damage at sudden pressure of 2300 Pa No damage at sudden depressurisation of 1700 Pa Tilt-and-turn frame A3-EE-VE 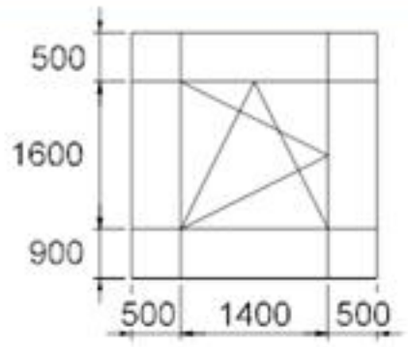	0110/02

Horizontal line effect façade with 10° convex and concave angles

Type of test	Results	Test report reference n
Air permeability, Watertightness, Wind load	Less than 4m3/h/m2 at 1200 Pa pressurisation Less than 4m3/H/m2 at 900 Pa depressurisation Watertight at 750 Pa pressure No damage at sudden pressure of 2100 Pa No damage at sudden depressurisation of 1600 Pa 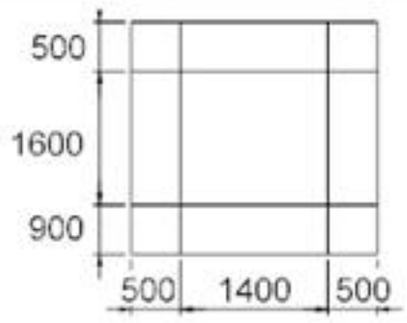	0205/02

Horizontal line effect fire access

Type of test	Results	Test report reference n
Air permeability, Watertightness, Wind load	Air permeability : Class 4 Watertightness: Class 9A Wind load: Class C3 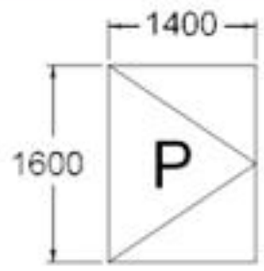	0112/02

Horizontal line effect façade

Type of test	Results	Test report reference n
Shock impact	Satisfactory No damage as a result of a dynamic shock	0112/01

Vertical line effect façade with top-hung vent

Type of test	Results	Test report reference n
Air permeability, Watertightness, Wind load	Less than 4m3/h/m2 at 1200 Pa pressurisation Less than 4m3/H/m2 at 900 Pa depressurisation Watertight at 1200 Pa pressure No damage at sudden pressure of 2300 Pa No damage at sudden depressurisation of 1700 Pa Top-hung frame A3-EE-VE 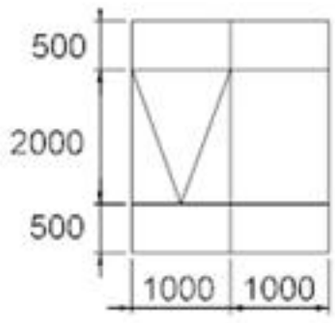	0203/01

All test reports are available and downloadable
in PDF format on our Internet site: www.technal.fr

geffc016